instructions

Kit 1708

AUDI A3, 3-dr Hatchback, 12–
AUDI A3, 5-dr Hatchback, 12–

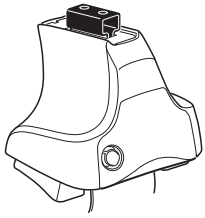

754 Rapid System
480R Rapid Traverse (North America)

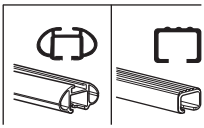

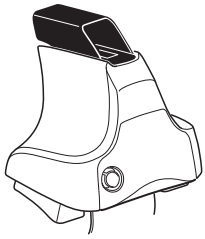

480 Traverse (North America)

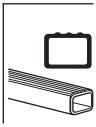

ISO 11154-E

THULE® SWEDEN

c.20121205. 503-1708-01

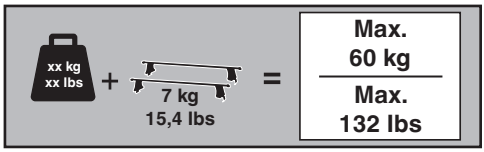
xx kg
xx lbs
+
7 kg
15,4 lbs
=
Max.
60 kg
Max.
132 lbs

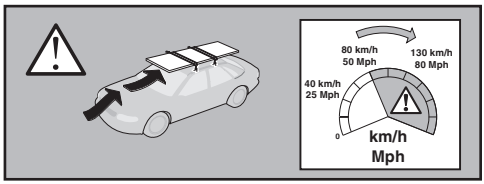
80 km/h
50 Mph
130 km/h
80 Mph
40 km/h
25 Mph
0
km/h
Mph

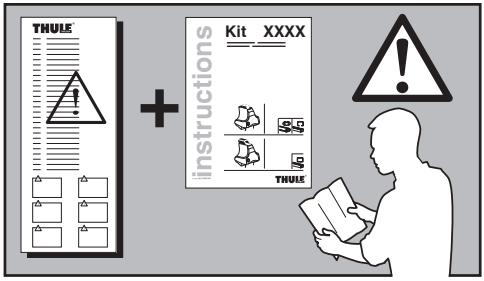
THULE
+
instructions
Kit XXXX
THULE

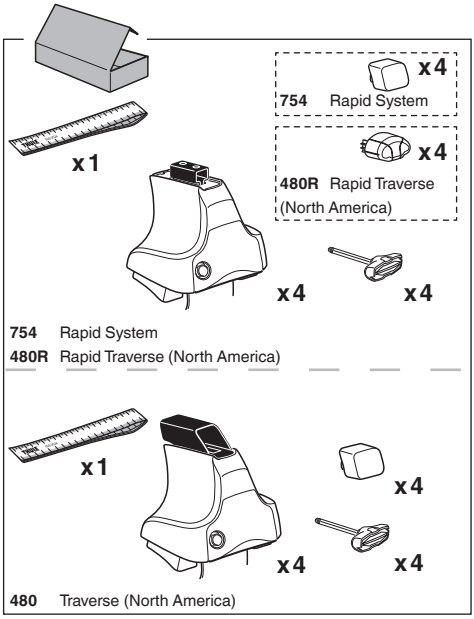
x 1
x 4
754 Rapid System
x 4
480R Rapid Traverse
(North America)
x 4
x 4
754 Rapid System
480R Rapid Traverse (North America)
x 1
x 4
x 4
x 4
480 Traverse (North America)

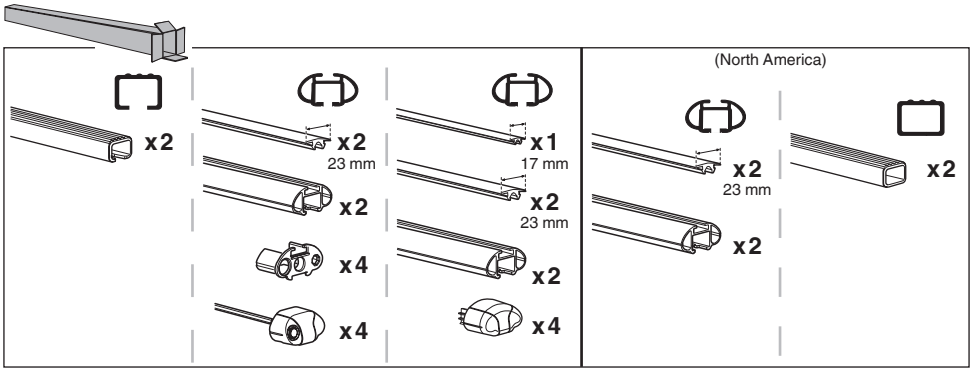
x 2
x 2
23 mm
x 2
x 4
x 4
x 1
17 mm
x 2
23 mm
x 2
x 4
(North America)
x 2
23 mm
x 2
x 2

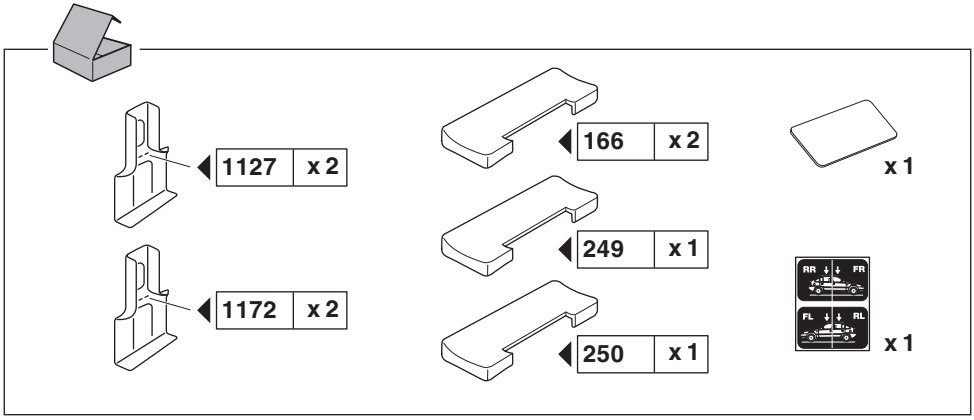
1127 x 2
1172 x 2
166 x 2
249 x 1
250 x 1
x 1
RR
FR
FL
RL
x 1

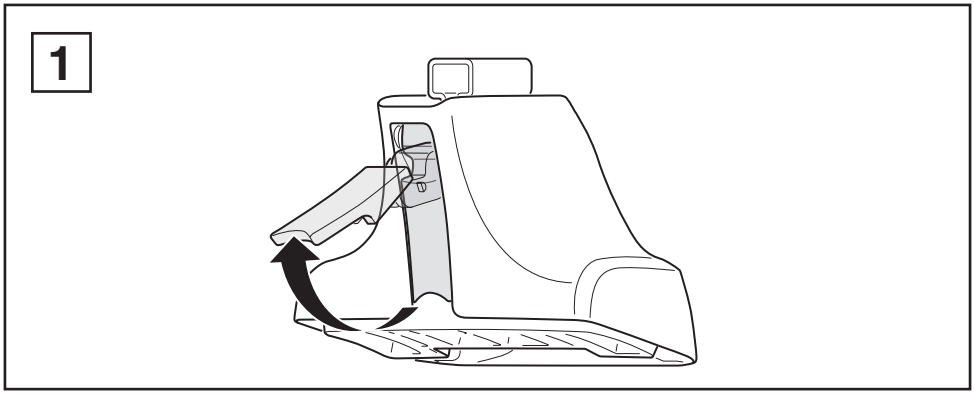
1

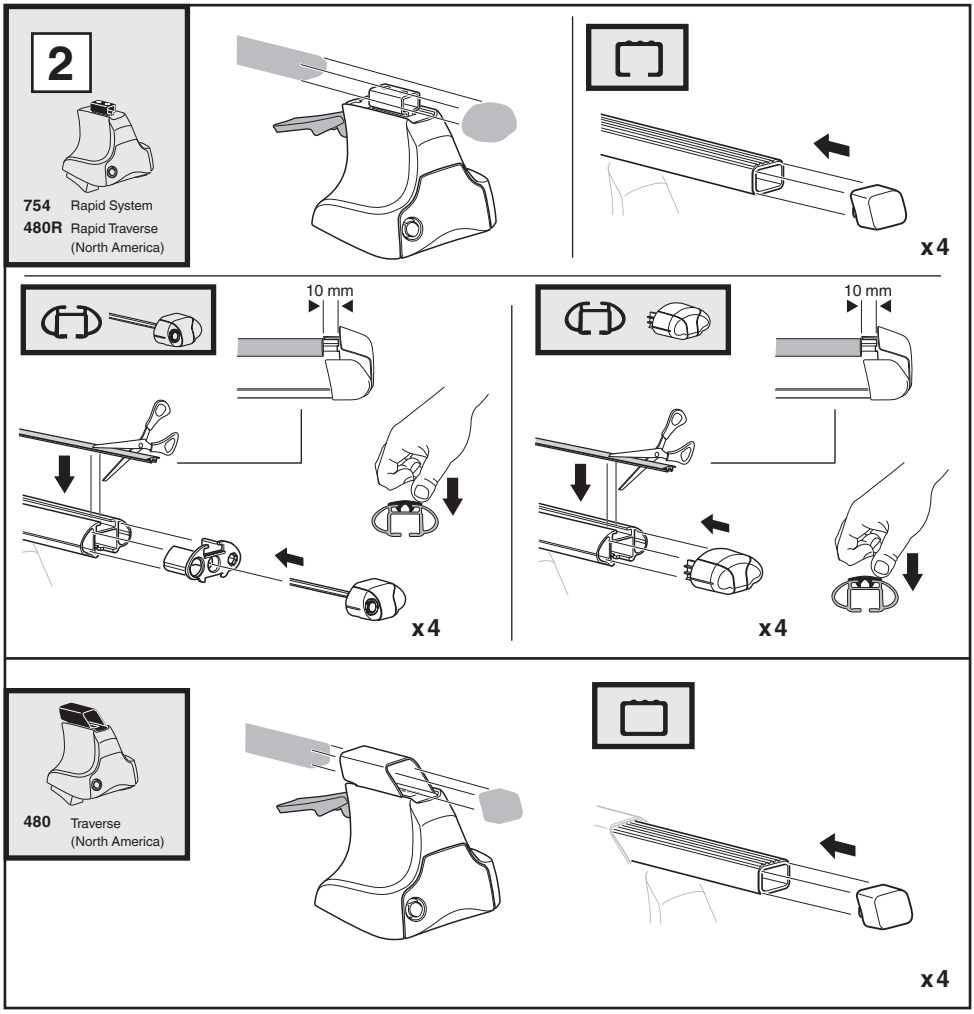
2
754 Rapid System
480R Rapid Traverse
(North America)
x4
10 mm
x4
10 mm
x4
480 Traverse
(North America)
x4

3

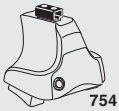

754 Rapid System

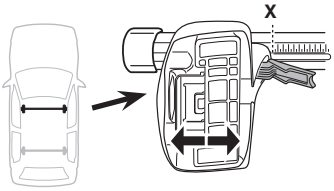

	X
AUDI A3, 3-dr Hatchback, 12–	**36,5**
AUDI A3, 5-dr Hatchback, 12–	**36,5**

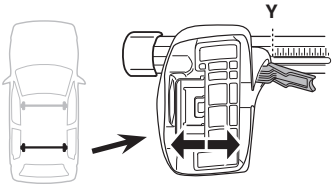

	Y
AUDI A3, 3-dr Hatchback, 12–	**31**
AUDI A3, 5-dr Hatchback, 12–	**31**

3

480R Rapid Traverse

480 Traverse

(North America)

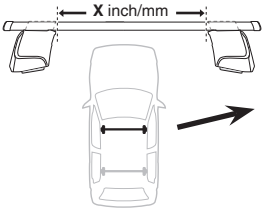

	X inch	X mm
AUDI A3, 3-dr Hatchback, 12–	**40** ”	**1016** mm
AUDI A3, 5-dr Hatchback, 12–	**40** ”	**1016** mm

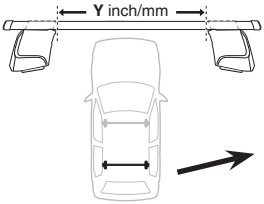

	Y inch	Y mm
AUDI A3, 3-dr Hatchback, 12–	**37** $^{7}/_{8}$ ”	**961** mm
AUDI A3, 5-dr Hatchback, 12–	**37** $^{7}/_{8}$ ”	**961** mm

4

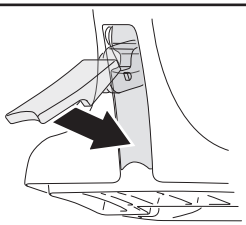

5

AUDI A3, 3-dr Hatchback, 12–
AUDI A3, 5-dr Hatchback, 12–

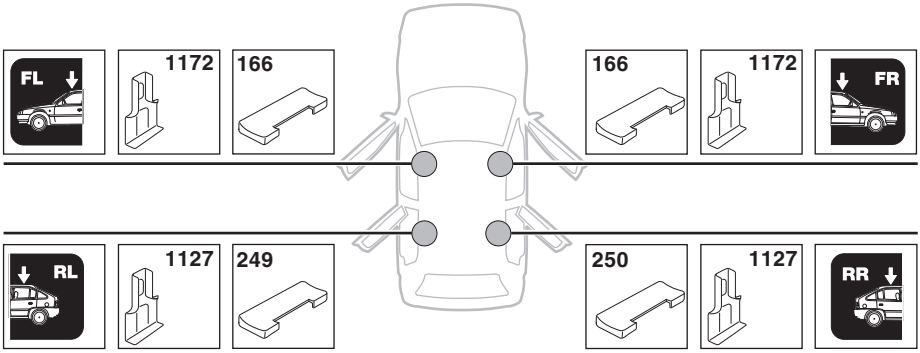

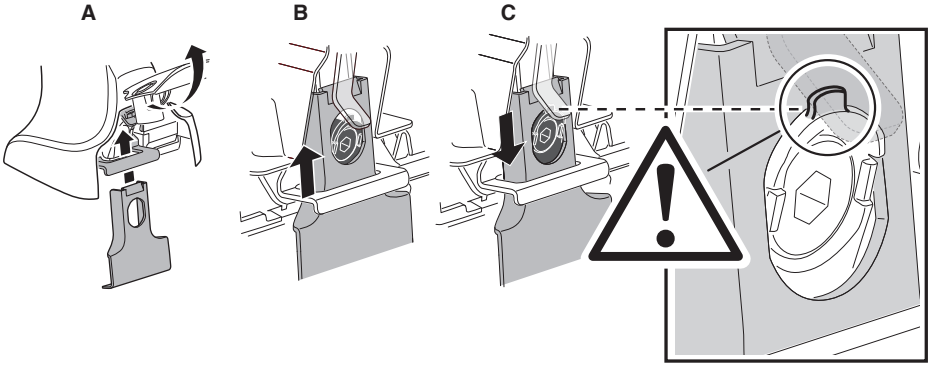

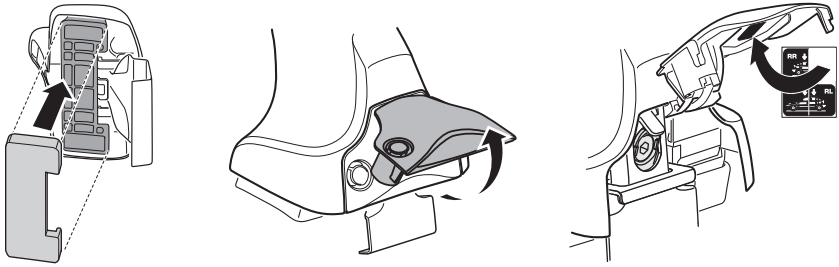

6

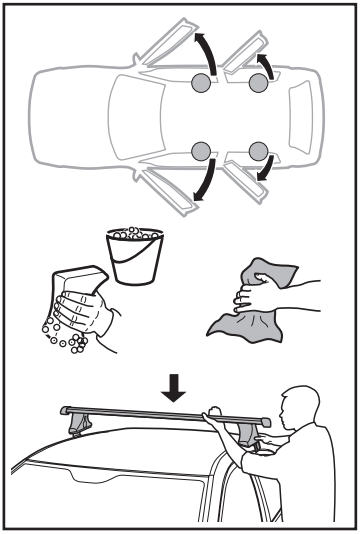

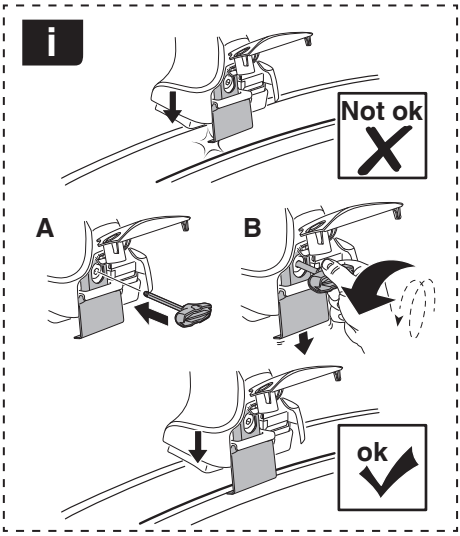

	X mm	**Y** mm	**X** inch	**Y** inch
AUDI A3, 3-dr Hatchback, 12–	**250** mm	**710** mm	**9 7/8”**	**28”**
AUDI A3, 5-dr Hatchback, 12–	**250** mm	**710** mm	**9 7/8”**	**28”**

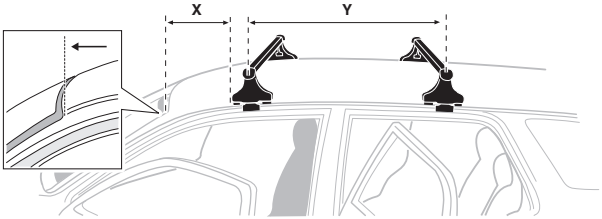

AUDI A3,
3-dr Hatchback, 12–

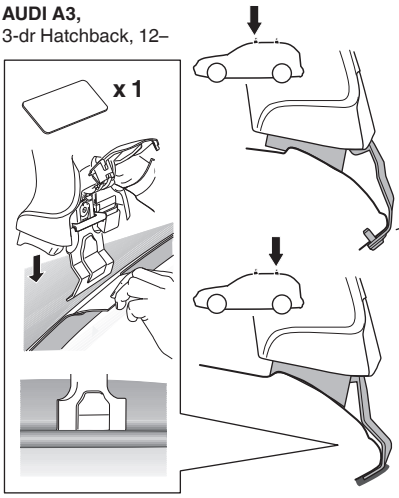

AUDI A3,
5-dr Hatchback, 12–

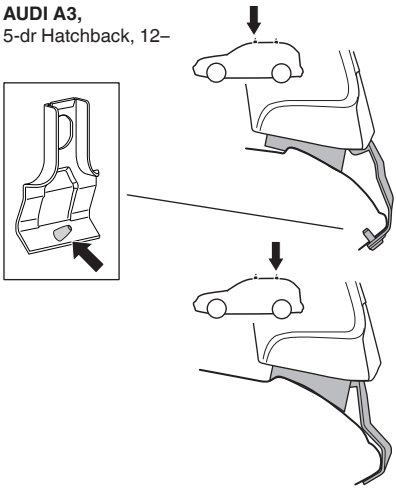

7

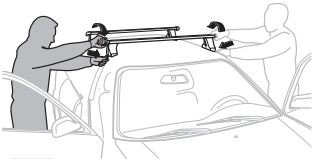

GB/US	Tighten alternately
D	Die Schrauben abwechselnd anziehen
F	Serrer alternativement chaque côté
NL	Afwisselend aan de linker- en de rechterkant aandraaien
I	Alternare il serraggio delle viti
E	Apretar alternativamente
PT	Aperte alternadamente
S	Dra åt växelvis
FIN	Kierrä vuorotellen
EST	Pinguldage vaheldumisi
LAT	Pievelciet pamīšus
LIT	Užsukinėkite pakaitomis
PL	Śruby dokręcaj naprzemiennie
RU	Затягивайте попеременно
CZ	Pokrętła bagażnika dokręcaj dokręcaj naprzemiennie.
SK	Dotahujte striedavo
SLO	Privijajte izmenično.
HR	Naizmjenično zategnite
HU	Egymástól függetlenül szorítandó
GR	Σφίγγετε εναλάξ
TR	Dönüşümlü sıkın
中文	交替拧紧
한국어	번갈아 가며 조이십시오.
日本語	交互に締め付けてください。
ไทย	ขันในแบบสลับ

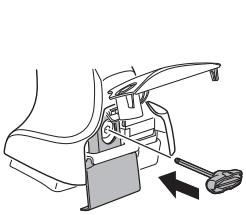

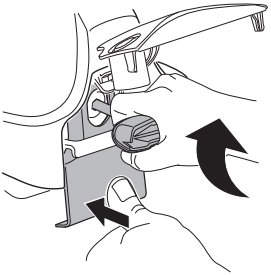

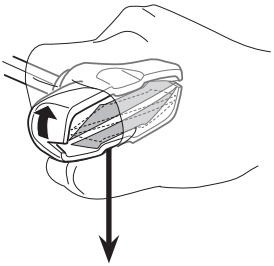

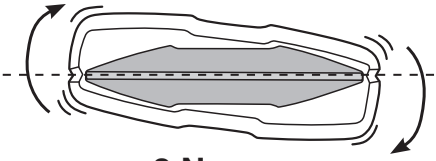

≈ 3 Nm

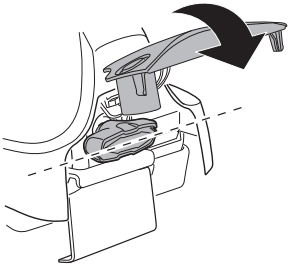

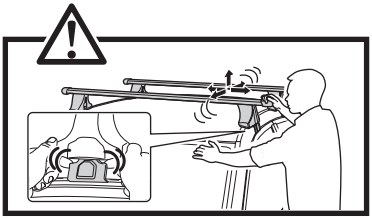

8

x1
17 mm

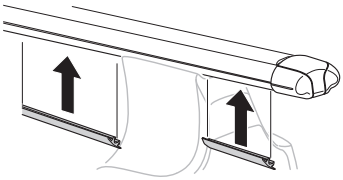

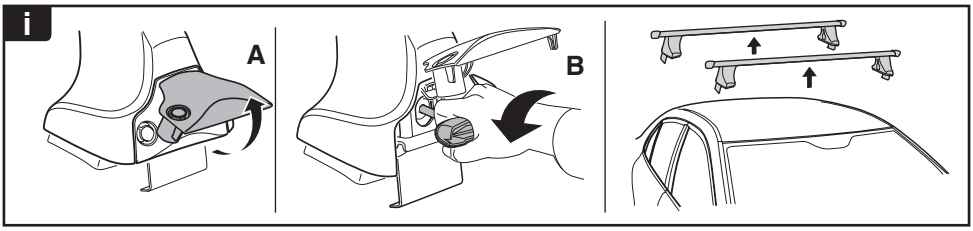

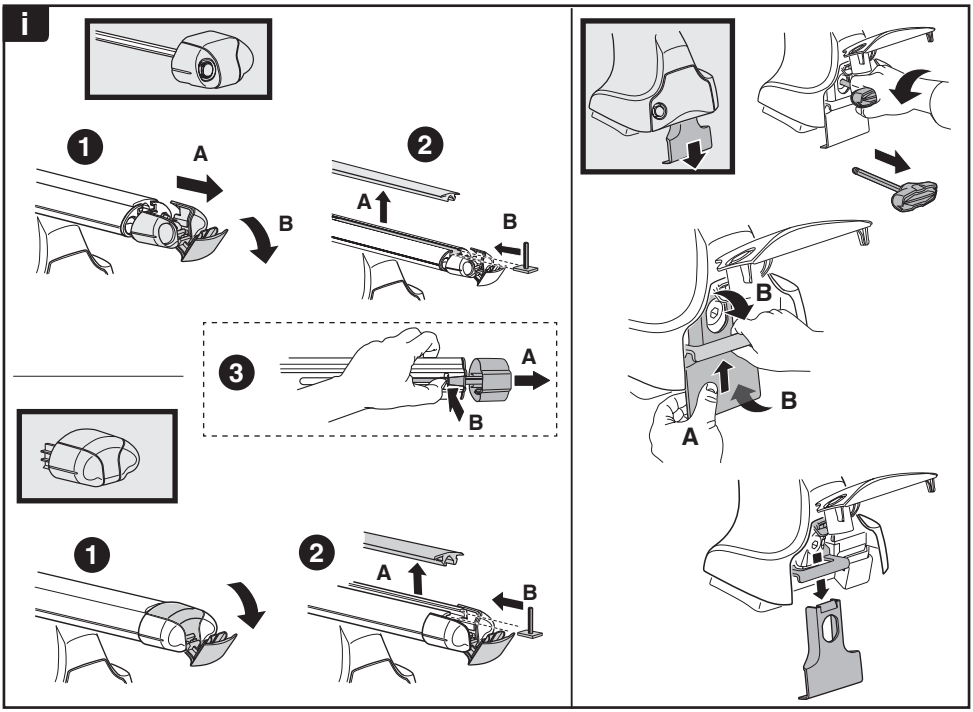

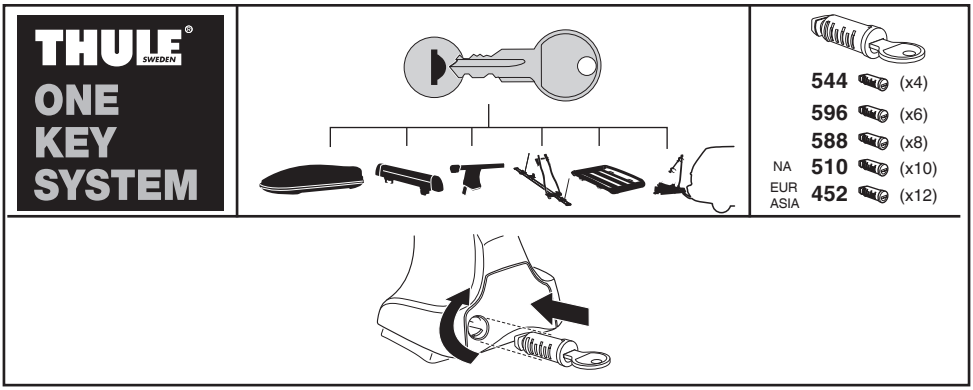

WW Thule Sweden AB, Box 69, 330 33 Hillerstorp, SWEDEN
NA Thule Inc., 42 Silvermine Road, Seymour, Connecticut 06483, USA
info@thule.com
customer.service@thule.com
www.thule.com

503-1708-01